MEDCOAST 99 – EMECS 99 Joint Conference, Land- Ocean Interactions: Managing Coastal Ecosystems
9 – 13 November 1999; Antalya, Turkey.

Impact of discharged fuel oil on plankton ecosystems: A mesocosm study in the Changjiang Estuary, China

Hiroshi Koshikawa[1], Kaiqin Xu[1], Hideaki Maki[1], Shogo Murakami[1], Mingyuan Zhu[3], Teru Ioriya[2] Kunio Kohata[1] and Masataka Watanabe[1]

1. ***National Institute for Environmental Studies, Tsukuba 305-0053, Japan***
   Tel. +81-298-50-2505; Fax +81-298-50-2576
   E-mail: koshikaw@nies.go.jp
2. ***Tokyo University of Fisheries, Minato-Ku, Tokyo 108-0075, Japan***
3. ***First Institute of Oceanography, State Oceanic Administration, Qingdao, China***

Abstract

An oil enrichment experiment using the water-soluble fraction (WSF) of #0 diesel oil was conducted in mesocosms in the Changjiang Estuary, China, over 7 days, to investigate the acute impact of oil on the plankton ecosystem. The dominant grazers (ciliates, noctiluca and copepods) decreased in abundance after the addition of WSF. The decline of ciliates was particularly marked, suggesting that they were most sensitive to WSF. There was little difference in phytoplankton abundance between the control and oil-enriched mesocosms, because nutrients became deficient in both mesocosms. However, a batch experiment with ^{13}C bicarbonate revealed that photosynthetic activity was strongly affected by the WSF addition. The study suggests that oil pollution may have a direct impact on productivity in marine ecosystems.

Introduction

The adverse effects of crude and fuel oil on marine ecosystems have been well documented over the past few decades since large-scale oil-spill accidents began to occur all over the world. Many studies have pointed out that the water-soluble fraction (WSF) is the most toxic of the oil components and may affect marine microorganisms

significantly (Siron et al. 1991, Griffin and Calder 1977, Henson and Hayasaka 1982). Undoubtedly, large-scale tanker accidents cause fatalities to marine organisms through WSF. In addition, frequent small-scale fuel leakage from ships and the discharge of oil into coastal seas from industrial complexes and sewage outfalls may produce WSF in the marine environment and cause acute and/or chronic impact on marine ecosystems.

The objective of this study was to investigate the acute impact of WSF on the planktonic ecosystem in the Changjiang Estuary in the East China Sea. Recently, oil pollution in the estuary has become a serious problem as a result of rapid industrial development of the coastal zone. The frequency of shipping traffic is also increasing and the estuary is constantly exposed to pollution crises resulting from nautical accidents. A collaborative research project between Japan and China on 'Environmental loading from river inputs and their effects on the marine ecosystem in specified areas of the East China Sea' has been in operation since 1997. We conducted this experiment with WSF of fuel oil in 1998 as part of the collaborative project, to understand the effect of oil on marine ecosystems.

Materials and Methods

Marine mesocosms and experimental site

A pair of mesocosms, which are useful tools for investigating the response of an ecosystem to pollution and nutrient loading (Grice and Reeve 1982), were installed near Liuhuashan – Huanaoshan (lat 30°50'N, long 122°37'E) in the Changjiang estuarine area (Fig. 1) for 7 days from 26 May (day 0) to 1 June (day 6), 1998. This area has a strong tidal current, high waves (over 1 m), and a large tidal exchange (several meters in maximum). We chose a floating mesocosm system, which is best suited to these conditions (Fig. 2). The mesocosms (5 m deep, 3 m diameter, volume about 25 m^3) were made of ethylene-vinyl-acetate reinforced with a polyester grid; they were translucent (light transparency about 50%) with no chemical release from the surface. On the evening of 26 May, seawater was introduced simultaneously into the mesocosms through the bottom valve. The two mesocosms filled with seawater--one for oil enrichment (OE-mesocosm) and the other the control (OC-mesocosm)--were moored to the stern of the anchored research vessel 'Haijian 49' of the State Oceanic Administration, China (Fig. 3).

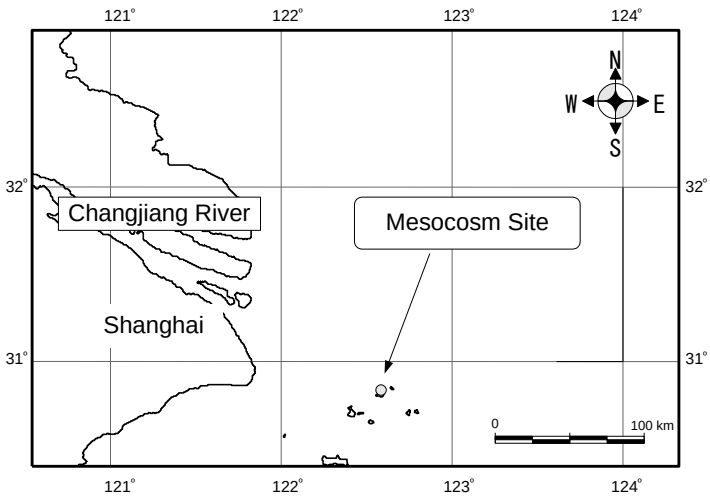

Figure 1. Location of the mesocosm experiments

Phosphate and oil enrichment

Prior to oil addition, phosphate ($NaH_2PO_4 \cdot 2H_2O$) was added into both mesocosms to a final concentration of ca. 1.5 μM on the night of day 0 when the water masses were isolated, in order to increase the activity of phytoplankton. Waters of this estuarine area have a high N/P ratio and phytoplankton growth is limited by phosphate deficiency (Harrison et al. 1992). We presumed that nutrient limitation would complicate evaluation of the effect of oil contamination on biological activity.

Oil addition into the OE-mesocosm was conducted at 1200 on day 2. The added oil was WSF of #0 diesel oil that is used as fuel by ships in China. The WSF was prepared as follows: About 0.9 m^3 of seawater taken from the experimental site and 0.1 m^3 of the diesel oil were well mixed on the research vessel during the day, using a stirrer device within a 1-m^3 polyvinyl-chloride tank. The mixed solution was then allowed to stand for almost two days, and separated into an oil layer and oil-saturated seawater. The latter was gently drained into the OE-mesocosm using a siphon system. The volume of oil-saturated seawater that was added into the mesocosm amounted to about 0.8 m^3.

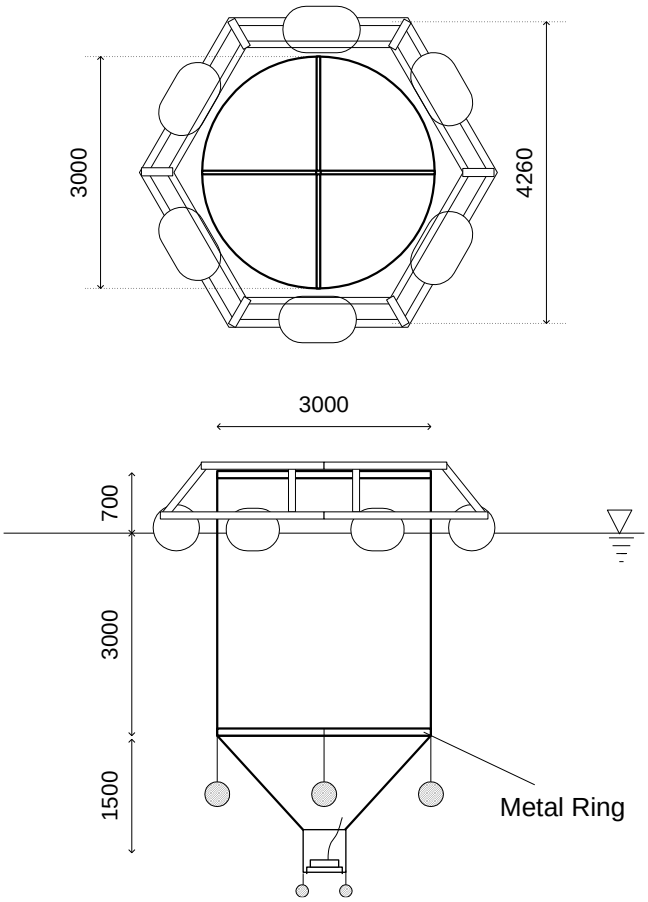

Figure 2. Schematic view of floating mesocosm (unit; mm)

Figure 3. The mesocosms moored to the research vessel.

Sampling and measurements

Seawater samples were collected from both mesocosms at a depth of 1 m, using 10-l Van-Dorn samplers, on the evening of day 0 and every morning on days 1 to 6. The concentration and composition of the oil were determined by the TLC-FID method (by Iatroscan MK-5, Iatron, Tokyo, Japan, Goto et al. 1994). Subsamples of seawater were

filtered with precombusted Whatman GF/F filters for analysis of nutrients (by Traacs 800, Bran+Luebbe), particulate organic carbon (by EA1108, Fisons), and dissolved organic carbon (DOC, by TOC5000A, Shimadzu). The filters and filtrate were stored at –20°C prior to analysis. Phytoplankton samples were fixed with 6% formalin, and the species composition and abundance were determined by microscopy. A subsample for nano-sized heterotrophic protists was fixed with glutaraldehyde (final conc. 1%) and stained with DAPI (Porter and Feig 1980), and their abundance was determined by epifluorescence microscopy (Nakamura et al. 1995). Samples for micro-sized protists (>20 µm) and metazooplankton (>100 µm) were passed through 100-µm and 20-µm plankton nets sequentially; these samples were fixed with 6% formalin and stored in a cool dark place, and the species composition and abundance were determined by microscopy.

Batch experiment for evaluation of WSF impact on photosynthesis

To determine the impact of oil addition on the primary producers directly, a batch-incubation experiment (Test A) was performed. Test A began just before WFS enrichment of the OE-mesocosm (day 2). Seawater samples were taken from both mesocosms and incubated with ^{13}C-bicarbonate in a seawater bath on the vessel. After 4 h, the incubated seawater was divided into two 2-l bottles; WSF was added to one at the same concentration as that in the OE-mesocosm. Incubation with and without oil continued for 16.5 h. Subsamples were taken after 2, 5.5 and 16.5 h and ^{13}C uptake (atom %) by the particles was determined.

Results and Discussion

WSF of #0 diesel oil

The composition of original diesel oil, determined by the TLC-FID method, was 45% saturated hydrocarbons, 11% aromatics, 28% resin and 16% asphaltene. Within the oil-saturated seawater prepared on the vessel, however, only the fractions of resin and asphaltene were detected. It is presumed that the fraction of 'resin' contained highly polar components that were easy to move from the oil phase to the seawater phase. The total oil concentration in the OE-mesocosm remained at about 1.6 mg l^{-1} from day 3 (Fig. 4). The DOC concentration increased from 1.1 mg C l^{-1} (day 2) to 3.2 mg C l^{-1} on day 3 and remained at a similar concentration until the end of experiment (Fig. 4). These results indicate that the WSF was apparently dissolved homogeneously in the mesocosm.

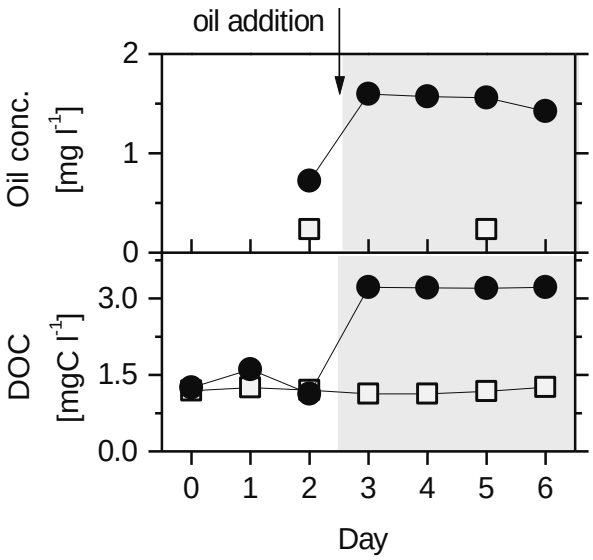

Figure 4. Daily changes in concentration of oil and dissolved organic carbon (DOC).
–□– OC-mesocosm; –■– OE-mesocosm.

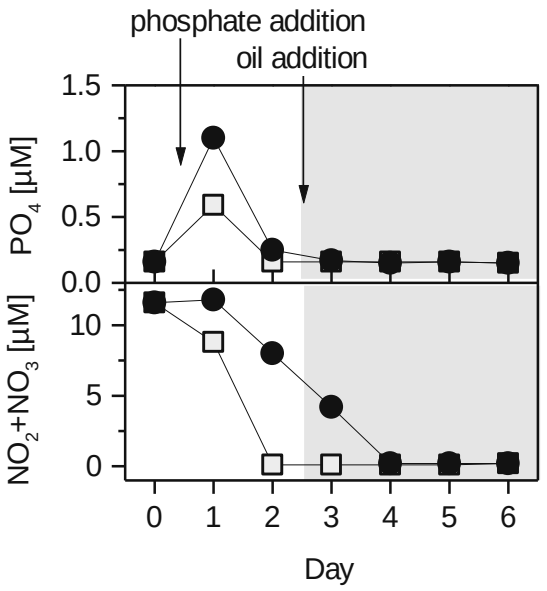

Figure 5. Nutrient concentrations over time in the two mesocosms.
–□– OC-mesocosm; –□– OE-mesocosm.

WSF impact on phytoplankton abundance

The initial concentrations of macronutrients (day 0) were almost the same in the two mesocosms (phosphate = 0.16 µM, and nitrate + nitrite = 11.6 µM) (Fig. 5). However, on day 1, after the addition of phosphate into the two mesocosms, the concentrations of nutrients were higher in the OE-mesocosm than in the OC-mesocosm. The density of the dominant dinoflagellate, *Prorocentrum dentatum*, in the OC-mesocosm (3.4×10^2 cells ml^{-1}) was about double that in the OE-mesocosm (1.4×10^2 cells ml^{-1}). Plankton abundance in the two mesocosms became different even though the water they contained was enclosed almost simultaneously and phosphate was added to the same concentration. This suggests that some slight difference in environmental conditions or in the number of higher order grazers, etc. can easily cause differences in an ecosystem; hence, differences in abundance of phytoplankton between the OC- and OE-mesocosms cannot be interpreted simply as the impact of oil. The decrease in nutrients was more rapid in the OC-mesocosm and the nitrate + nitrite content was almost consumed by day 2, though it remained until day 4 in the OE-mesocosm (Fig. 5).

WSF impact on photosynthesis

The batch incubation experiment with ^{13}C-bicarbonate clearly showed the adverse effect of WSF on photosynthetic activity, although phytoplankton abundance and photosynthetic production alone were insufficient to demonstrate the effect of WSF. In Test A, it was found, in incubation experiments using seawater taken from the OC- and OE-mesocosms, that ^{13}C-bicarbonate uptake decreased significantly after WSF addition, in comparison with ^{13}C uptake without WSF addition (Fig. 6).

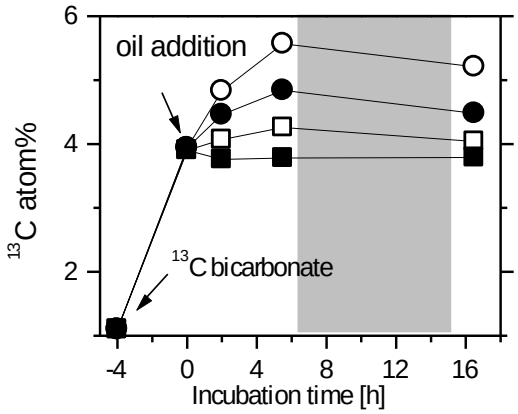

Figure 6. Results of test A.
–□– OE control; –□– OE with oil-enriched water;
–□– OC control; and –□– OE with oil-enriched water. Dark area indicates night.

WSF impact on grazer abundance

Although there were differences in abundance of the most dominant phytoplankters between the two mesocosms initially, the abundance and composition of other plankton were quite similar before the addition of WSF (Fig. 7). Phytoplankton grazers in the two mesocosms included the heterotrophic dinoflagellate *Noctiluca scintillans*, ciliates and copepods. The most abundant grazers before WSF addition (days 1 to 2) were *N. scintillans* and copepods in the >100 µm size fraction, tintinnid ciliates of the 20–100 µm fraction, and tintinnid and oligotrich ciliates in the <20 µm size fraction.

After addition of WSF into the OE-mesocosm, the total number of *N. scintillans*, nano- and micro-sized ciliates and copepods decreased, while the relative abundance of *P. dentatum* remained similar to that in the OC-mesocosm. The ciliates decreased suddenly and to a large extent with WSF addition. We suggest that ciliates are the most sensitive organisms to WSF at concentrations around 1.6 mg l^{-1}. Other studies have reported the adverse effect of oil on ciliates. Dale (1988) conducted enclosure experiments with oil addition and concluded that loricate choreotrichs are better protected against oil-derived material than non-loricate choreotrichs. In this study, oil addition was followed by decreases in both oligotrich ciliates and tintinnids, although only the former disappeared completely; note, however, that abundance data on each type of ciliate were not collected.

The abundance of *N. scintillans* in the OE-mesocosm decreased continually during the experimental period. Using microscopy on fresh samples on board the vessel, the cells of *N. scintillans* after WSF addition were seen to have shrunk and the surface of cells to have lost their turgor. Thus, *N. scintillans*, as well as the ciliates, was sensitive to WSF. *N. scintillans* in the OC-mesocosm also decreased slightly; however, microscopy showed that the cells seemed to be healthier than those in the OE-mesocosm.

The total abundance of copepods in the OE-mesocosm remained lower than that in the OC-mesocosm after WSF addition, although there was some fluctuation in their numbers during the experiment. These daily variations might be caused by the migratory

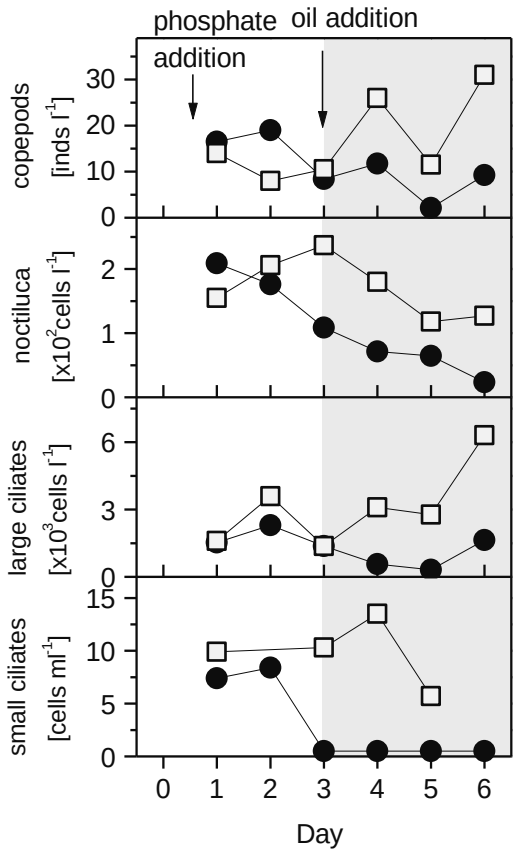

Figure 7. Daily abundances of copepods (>100µm), noctiluca (>100µm), large ciliates (20–100 µm) and small ciliates (<20 µm).
–□– OC-mesocosm; –□– OE-mesocosm.

behavior of the copepods themselves and/or changes in mixing conditions in the water columns, which would be in proportion to wave height around the mesocosms. However, the average abundances before and after WSF addition (days 1 to 2 and days 3 to 6, respectively) reflected the impact on copepods.

The adverse effect of WSF on grazers would affect carbon transfer and carbon cycle within the food webs. More details concerning this aspect are now being investigated.

Conclusions

The results from our mesocosm study in the Changjiang Estuary are preliminary. WSF addition to a concentration of 1.6 mg l^{-1} did not alter the abundance of the dominant phytoplankter (*Prorocentrum dentatum*) relative to the control. Thus, it was possible that WSF did not affect the phytoplankton. However, the batch experiment with inorganic ^{13}C, which was conducted in parallel, revealed clearly that photosynthetic activity was affected by WSF addition. The abundant grazers (*Noctiluca scintillans*, ciliates and copepods) in the mesocosm declined on addition of WSF. In particular, ciliates were more sensitive than other organisms to WSF addition.

References

Dale T (1988) Oil pollution and plankton dynamics. 6. Controlled ecosystem experiments in Lindaaspollene, Norway, June 1981: Effects on planktonic ciliates following nutrient addition to natural and oil-polluted enclosed water columns. Sarsia 73, 3:179-191

Goto M, Kato M, Asaumi M, Shirai K, Venkateswaran K (1994) TLC-FID method for evaluation of the crude-oil-degrading capability of marine microorganisms. J Mar Biotechnol 2:45-50

Grice GD, Reeve MR (1982) Introduction and description of experimental ecosystems. In: Grice GD and Reeve MR (eds) Marine mesocosms. Springer-Verlag, New York. p1-9

Griffin LF, Calder JA (1977) Toxic effect of water-soluble fraction of crude, refined and weathered oils on the growth of a marine bacterium. Appl Environ Microbiol, 33:1092-1096

Harrison PJ, Yang YP, Hu MH (1992) Phosphate limitation of phytoplankton growth in coastal estuarine waters of China and its potential interaction with marine pollutants. In: Wong CS and Harrison PJ (eds) Marine ecosystem enclosed experiments. International Development Research Centre, Canada, p192-202

Henson JM, Hayasaka SS (1982) Effects of the water-soluble fraction of microbiologically or physically altered crude petroleum on the heterotrophic activity of marine bacteria. Mar Environ Res, 6:205-214

Nakamura Y, Suzuki S, Hiromi J (1995) Population dynamics of heterotrophic dinoflagellates during a *Gymnodinium mikimotoi* red tide in the Seto Inland Sea. Mar Ecol Prog Ser 125:269-277

Porter KG, Feig YS (1980) The use of DAPI for identifying and counting aquatic microflora. Limnol Oceanogr 25:943-948

Siron R, Giusti G, Berland B, Morales-Loo MR, Pelletier E (1991) Water-soluble petroleum compounds: chemical aspects and effects on the growth of microalgae. Sci Total Environ, 104:221-227

Keywords

Mesocosm,
Oil,
Water Soluble Fraction,
Plankton Ecosystem,
Photosynthesis,
Dinoflagellate,
Noctiluca,
Ciliate,
Changjiang Estuary,
East China Sea

These keywords are for Hiroshi KOSHIKAWA et al. 'Impact of water-soluble fraction of fuel oil on plankton ecosystems: a mesocosm study in Changjiang Estuary'